BM110 SERIES (Chinese Model)

3.3KW Auto-Focusing Laser Cutting Head -User Manual

RAYTOOLS
Brighten your machine tools

Email: sales@raytools.com

Add: Friedeggstrasse 13, Postfach, 3400 Burgdorf, Switzerland

Version：	**V1.0**
Date：	2020/11/16

Historical Version：

Historical Version	Date of Release	Brief description of alteration	Editor	Date of Edit	Reviewer	Date of Review
V1.0	2021/09/08	Establish BM110 User Manual	CB	2021/09/05		

Thank you for choosing our products!

This manual makes a detail introduction about the use of BM110 series auto-focusing laser cutting heads, including installation, operation and maintenance instructions etc. If you have other things need to know, please contact us directly.

Please read the manual carefully before using the series cutting heads. This will help you use it better.

Due to the continuous updating of product features, please note the product you have received may differ in some aspects from the illustrations in this manual. We apologize for the inconvenience to you.

Index

1 Introduction 3
1.1 Product Features 3
1.2 Structure & Function 4
2 Mechanical Installation 4
2.1 Mounting Holes 4
2.2 Connection of Water Pipe and Gas Pipe 5
2.2.1 Water-cooled interface 5
2.2.2 Assist gas interface 6
2.3 Connection of Cutting Head Cable 7
2.3.1 Connection of Cutting Head and Cable 7
2.3.2 Connection of Cable and Driver 7
2.4 Fiber Input Interface 8
2.5 Fiber Insertion and Interface Direction Adjustment 8
3 Electrical Installation and Commissioning 9
3.1 FSCUT (BC) with position mode 9
3.1.1 Wiring 9
3.1.2 Interface Operation 10
4 Adjustment of Beam Center and Focus Position 11
4.1 Beam Center Position Adjustment (QBH interface) 11
4.2 Beam Focus Position Adjustment 12
5 Maintenance 12
5.1 Cleaning Lens 12
5.2 Removal and Installation of Lens 13
5.2.1 Removal and Installation of Protective Lens 13
5.2.2 Removal and Installation of Top Protective Lens 14
5.2.3 Removal and Installation of Collimating Lens 15
5.2.4 Removal and Installation of Focusing Lens 15
5.3 Replace Nozzle Connection Assembly 17
5.3.1 Replace Ceramic Structure 17
5.3.2 Replace Nozzle 18
6 Mechanical and Optical Configuration 18
6.1 Physical Structure 18
6.2 Optical Configuration 19
6.2.1 Collimation Length 19
6.2.2 Focus Length 19

1 Introduction

This manual includes the general description, basic installation, factory settings, operation and maintenance services and other aspects of BM110 series products, which have too many optical and mechanical customization configurations, so only the main parts will be introduced in this manual.

The BM110 series laser heads are auto-focusing cutting heads for fiber laser, which are released by RAYTOOLS in 2020. The products are equipped with internal servo motor drive units, which use the linear mechanism to drive the focusing lens to change position in the range of about 22mm automatically. Users can use the program settings to achieve continuous adjustment of the focus position to complete the rapid perforation of thick plates and automatic cutting of different thickness, material plates. The products can be equipped with D30 composite lens groups to integrate the beam. Diversified interface configurations can be adapted to a variety of fiber lasers, optimized optical and water-cooled design allows the laser heads work under high power for a long time continuously and steadily.

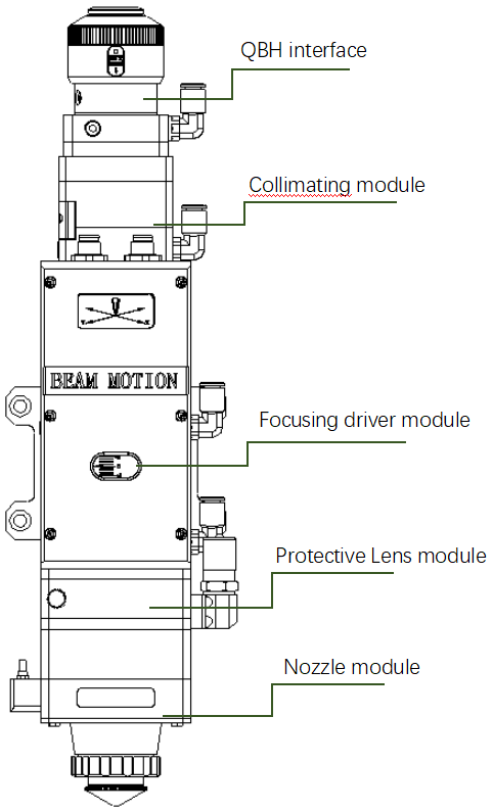

1.1 Product Features

- Optimized optical configuration and smooth and efficient airflow design.
- Automatic focusing range + 10 ~ -12mm, adjustment accuracy 0.05mm.
- Equipped with D30 composite lens groups, the maximum fiber power is up to 3KW.
- Maximum acceleration of focus lens driver 10m / s^2, maximum speed 6m / min.
- The drawer-type of lens mount makes the replacement of protective lens more quickly and easier.
- The composite lens groups are used for beam collimating and focusing to obtain the best optical quality and cutting effect.
- Equipped with QBH, QD and other fiber interfaces can match with various fiber lasers.

1.2 Structure & Function

As shown in Figure 1, the laser head consists of four basic units, such as collimating module, focusing driver module, protective lens module and nozzle module.

- Collimating module: collimate the incident laser into a parallel beam and adjust the beam spot from the center of the nozzle.
- Focusing driver module: The collimating beam is focused into a small beam spot which has high power density, and the focus position is adjusted by the driving device automatically.
- Protective lens module: The protective lens protects the focusing lens from damage by the returning slag and prolongs the service life of the focusing lens.
- Nozzle module: Guide the focus beam to the work piece and produce high velocity jet cutting to achieve high quality cutting.

2 Mechanical Installation

2.1 Mounting Holes

The mounting holes size and position of the BM110 laser cutting head are shown in Figure 2.1, which can be used to fix the laser head and machine tool. We strongly recommend customers to install the laser head perpendicular to the process material surface as requested and make sure the laser head is locked, this is one of the preconditions to ensure the follow-up stable cutting effect.

Note: The Z-axis motor slide plate for fixing the laser cutting head should be connected with machine tools and make sure there is a good grounding.

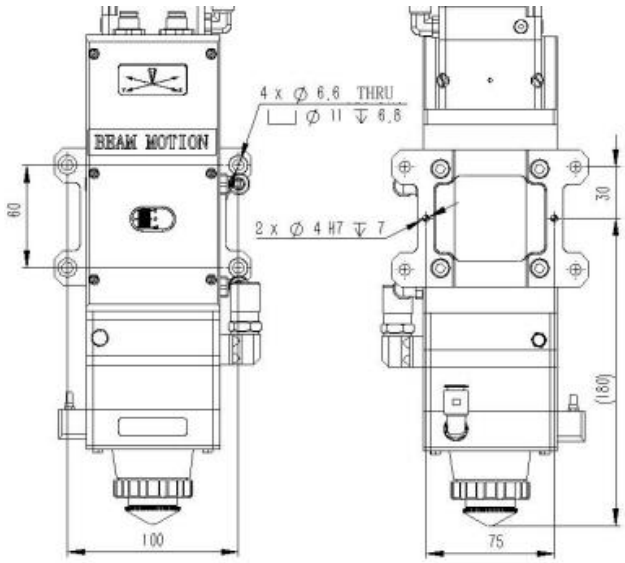

Fig 2.1 - mounting holes position

2.2 Connection of Water Pipe and Gas Pipe

2.2.1 Water-cooled interface

BM110 laser cutting head has 2 sets of water-cooled channels, the direction of water entry and exit can be arranged arbitrarily. It is important to note that when the laser power is greater than 500W. we recommend users to use water-cooled. As you can see from Figure 2.2, the position and quantity of the water interfaces, and the table below details the recommended water flow rate.

The design of this water-cooled interface is closed loop water-cooled system, and it also can be used equipped with external water supplied, the precondition is to meet the requirements in the list.

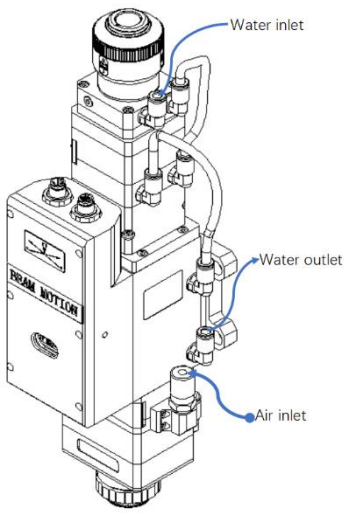

Fig 2.2 - position of water pipe and gas pipe interfaces

Cooling water pipe diameter (outside diameter)	6mm
Minimum flow speed	1.8 l/min(0.48gpm)
Entry pressure	170-520kPa(30-60 psi)
Entry temperature	≥room temperature / > dew point
Hardness (relative to CaCO3)	< 250mg/liter
PH range	6 to 8
Particles size available	Diameter less than 200 microns

2.2.2 Assist gas interface

The impurities in cutting gas such as hydrocarbons and water vapor can damage the lens and cause laser power fluctuation as well as inconsistencies between the sections of the work piece. The following table is the recommended cutting gas specifications. The higher the purity of the gas, the better the quality of the cutting section.

Impurities can be filtered out in gas supply tube, but Oxygen and water vapor can permeate light path through non-metallic materials, which is the source of the appearance of dust and hydrocarbons. Stainless steel fittings are recommended, at the same time customers must use filters which can remove a minimum of 0.01micron particle to purify.

We recommend customers to use the pressure gauges with stainless steel diaphragm. Industrial pressure gauges suck in air. Rubber diaphragm produces hydrocarbons by aging or other factors.

Cutting gas	Purity	Maximum content of water vapor	Maximum content of hydrocarbon
oxygen	99.95%	<5 ppm	<1 ppm
nitrogen	99.99%	<5 ppm	<1 ppm
argon	99.998%	<5 ppm	<1 ppm
helium	99.998%	<5 ppm	<1 ppm

Tracheal tube diameter specification

Cutting gas pipe diameter （outside diameter ）	10mm

Note: Gas interfaces cannot be replaced arbitrarily, especially do not use PTFE TAPE. Otherwise, the gas path will be blocked, the normal cutting will not be possible and the laser head parts will be damaged at the same time.

2.3 Connection of Cutting Head Cable

2.3.1 Connection of Cutting Head and Cable

Connect the corresponding connector of cutting head with motor power cable, encoder cable, sensor cable respectively (as shown in figure 2.3). After the proper length is reserved, the cable is inserted into the track groove of the machine tool and fixed.

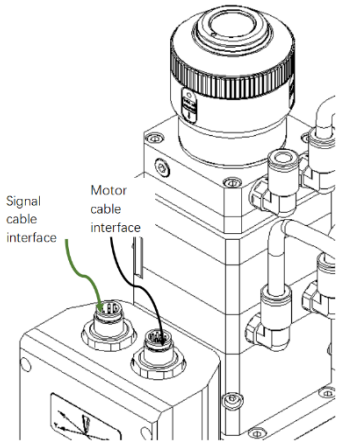

Fig 2.3 - cable interface of laser cutting head

2.3.2 Connection of Cable and Driver

Connect motor power cable (8-pin) and encoder cable (12-pin) with the corresponding interfaces of driver according to the definition in cable sleeve**. (Note: limit sensor is NPN NC type. It outputs NPN signal when the limit sensor is not triggered)**

Note: All wiring is in the state of power-off and the power can be debugged after inspection.

2.4 Fiber Input Interface

BM110 is suitable for most industrial fiber lasers. It is equipped with collimating lens assembly.

The connection between the end of the fiber and the cutting head is called fiber interface. Commonly used fiber connectors include QBH, QD and so on, and every fiber interface has its unique fixation method. Please refer to corresponding instruction of fiber interface.

Note: The optical devices must be kept clean and all dust must be removed before use. If the optical fiber is vertically inserted in the laser head, the laser head must be rotated 90 degrees to the horizontal level and then inserted the optical fiber in it to prevent dust from entering the interface and falling on the surface of the lens. Insert the optical fiber before fixing the laser head.

2.5 Fiber Insertion and Interface Direction Adjustment

In this section, an optical fiber insertion method is described in conjunction with QBH connector.

First, align the red point at the end of the QBH connector with the red point of the handwheel; then remove QBH dust proof cover, the red mark of fiber output end is aligned to QBH red mark, insert the fiber interface straight to bottom; Then turn the QBH handwheel clockwise. It is in place when you hear the "Da" sound, then pull the handwheel up and turn clockwise again.

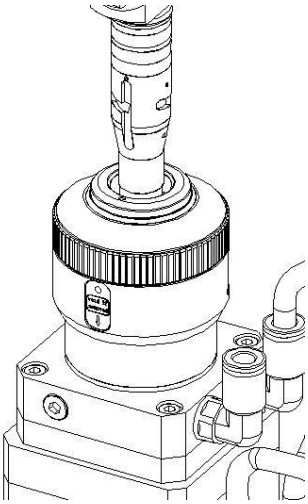

3 Electrical Installation and Commissioning

3.1 FSCUT (BC) with position mode

3.1.1 Wiring

The motor is mixed stepper motor. The Vdc, GND and PE shall be connected to 24V, 0V and earth. A+, A-, B+ and B- are for power interfaces of motor and shall be wired as below.

White	Red	Pink	Blue
+24V	0V	Up limit	Low limit

Note: The limit sensor is NPN-NC and it continuously outputs 0V signal when it is not triggered.

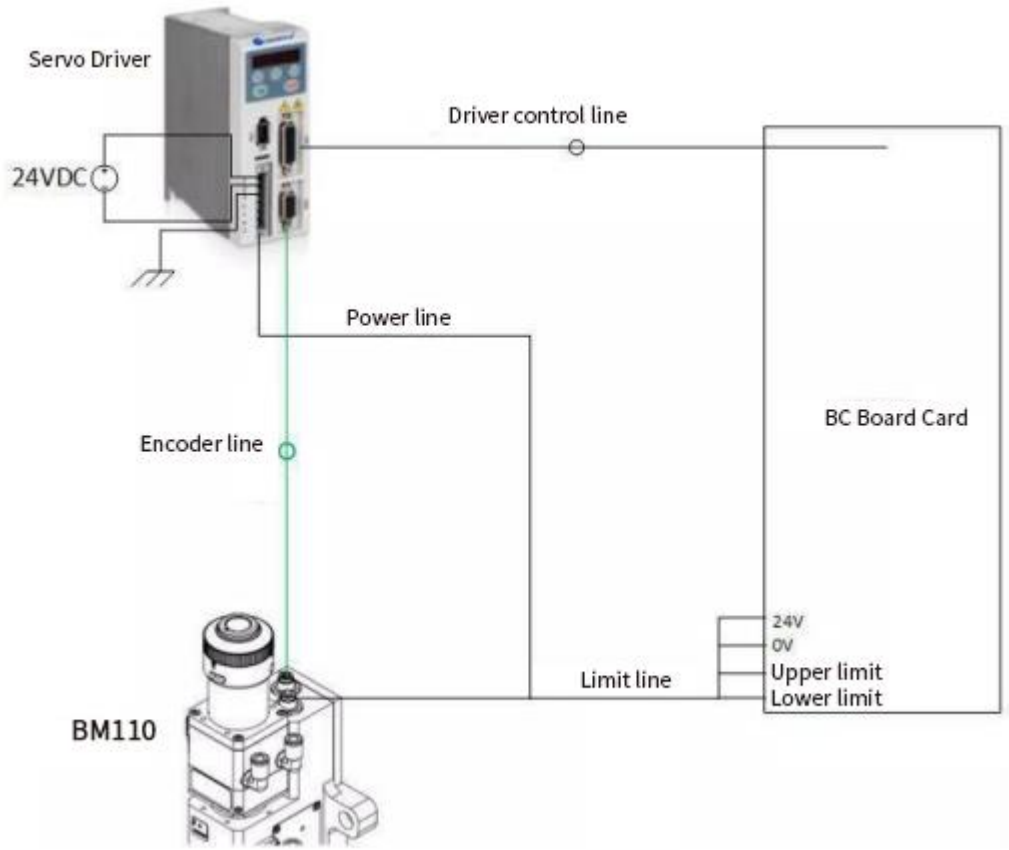

Open the platform configuration tool, enter the value shown below.

1. Set parameter as the figure (only for reference).
2. Select J axis for detection, open loop and initiate enable to travel and detect the encoder in (-12mm~+10mm) to determine the encoder direction.
3. Save the parameters and enter the interface

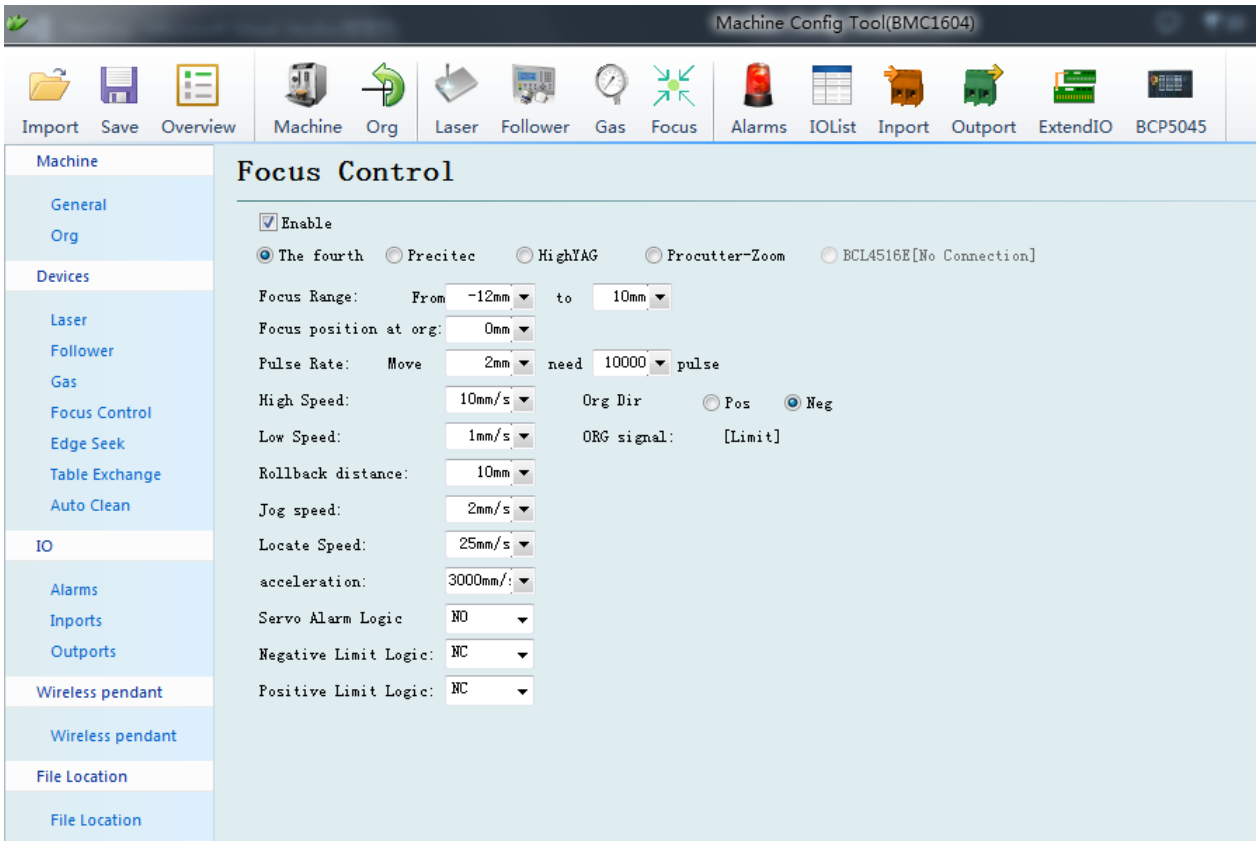

3.1.2 Interface Operation

1. Move J axis to check if the action is normal ("thread pitch" and direction), J+ indicates scale 0+.
2. Slowly moving the J axis so that it meets the positive and negative limit, check whether the direction and limit signal are normal or not.
3. By click homing icon, J axis moves to negative direction and do 2nd homing when touches negative limit. In this case the position of zero point coincides with zero focal position. The homing is finished.

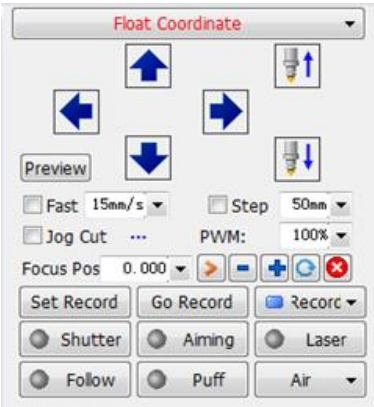

Figure 4.6— Operation

Note:

1. Click+, the lens holder moves upward. When it touches positive limit, click -, then lens

holder moves downward to the negative limit.

2. The direction of origin is negative, and take lower limit as a sampling signal.
3. Pitch 2mm, 40000 pulses per turn
4. Positioning speed is recommended 50-100mm/s.

4 Adjustment of Beam Center and Focus Position

4.1 Beam Center Position Adjustment (QBH interface)

Cutting quality in a great extent depends on whether the beam spot is in the center of nozzle or not. If the beam spot is not in the center, the laser beam may hit the nozzle or inner wall of the laser head, that leads to produce high temperature deformation. Beam center position adjustment should be considered when nozzle is replaced or the cutting quality is decreased.

Beam center position adjustment of the laser cutting head can be finished by adjusting Collimating lens, X-Y direction. The adjusting screws are located on the top of the cutting head as shown below. By using inner hexagon spanner users can loosen or tighten the adjusting screw until the beam spot is located in the center of nozzle. Make sure the laser beam output from the center of nozzle. A method commonly used, tape dotting method:

- Pick a scotch tape, flatten it, and stick it to the nozzle end face.
- Open the inner guiding red light of the laser. Finding and observing the position that the red light on the scotch tape relative to nozzle center;
- open and adjust laser generator at the range of 80W-100W, then laser dotting.
- Tear off the tape and check the hole is in the center of the nozzle or not.
- Repeat the above steps until the beam spot is in the center of the nozzle.

This center adjustment requires a series of steps, which is the basic operation of general laser adjustment.

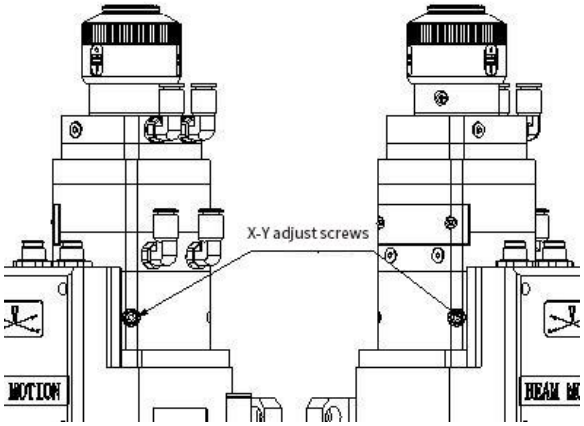

4.2 Beam Focus Position Adjustment

Even BM110 is equipped with automated focusing system, it still need dot manually to re-determine the focus position when users replace the lens or lasers. For details about operating system parameters, please refer to the system instructions.

Manual dotting can refer to the following steps:

1. The laser head scale is displayed to the maximum and the laser power range is set to 80-100w.
2. Then, within each moving 0.5mm (as small as possible), activate the laser to make a hole in the textured paper.
3. Dotting several times, finally compare and find out the scale corresponding to the smallest hole, which is the zero-focus position. The focus spot is just at the end of the nozzle tip.

5 Maintenance

5.1 Cleaning Lens

It’s necessary to maintain lens regularly because of the characteristic of laser cutting process. Once a weak cleaning the protective lens is recommended. The collimating lens and focusing lens need to be cleaned once every 2~3 month. In order to facilitate the maintenance of the protective lens, the protective lens mount adopts a drawer type structure.

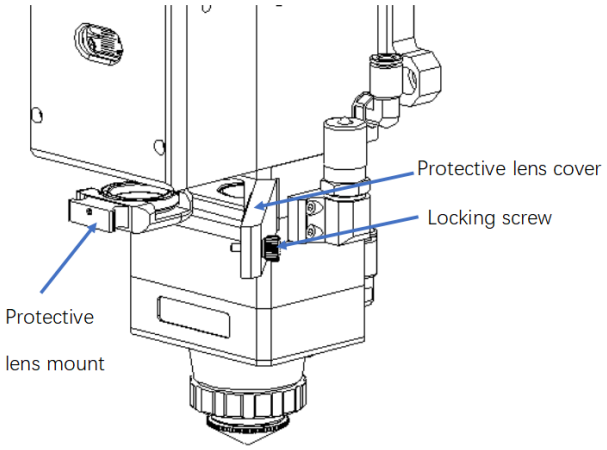

Lens cleaning

Tools: Dust-proof gloves or finger sleeves, polyester fibers cotton stick, ethanol, rubber gas blowing.

Cleaning instruction:

1. The left thumb and forefinger wear the finger sleeves.
2. Spray ethanol onto the polyester fibers cotton stick.
3. Hold the slide edge of the lens with left thumb and forefinger gently. (Note: avoid the fingertip touching the surface of the lens)
4. Put the lens in front of eyes, hold the polyester fibers cotton stick with the right hand. Wipe the lens gently in single direction, from bottom to top or from left to right, (Should not be able to wipe back and forth, to avoid secondary lens pollution) and use rubber gas blowing to sway the surface of the lens. Both sides should be cleaned. After cleaning, make sure that there are no residues: detergent, absorbent cotton, foreign matter and impurities.

5.2 Removal and Installation of Lens

The whole process needs to be completed in a clean place. Wear dust-proof gloves or finger sleeves when removing or installing the lenses.

5.2.1 Removal and Installation of Protective Lens

- The protective lens is a fragile part and needs to be replaced after damage.
- As shown below, open the buckle, open the cover of protective lens, pinch the two sides of the drawer-type lens holder and pull out the base of protective lens;
- Remove the pressure washer of the protective lens, remove the lens after wearing fingertips
- Clean the lens, lens holder and seal ring. The elastic seal ring should be replaced if

damaged.

- Install the new cleaned lens (Regardless of the positive or negative side) into the drawer type lens holder.
- Put the pressure washer of the protective lens back.
- Insert the protective lens holder back to the laser processing head, cover the lid of the protective lens and fasten the buckle.

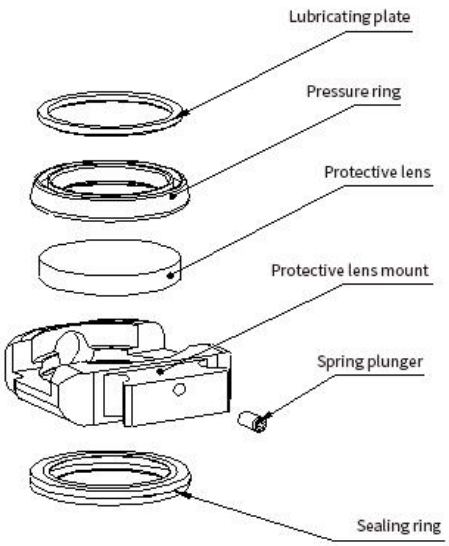

Note: Do not directly pull the edge of the elastic sealing ring out so that it is easy to get damaged.

5.2.2 Removal and Installation of Top Protective Lens

- Unscrew the locking screw of the top protective lens assembly with a 3mm Allen wrench.
- Remove the top protection lens cover and hold both sides of the drawer type lens base. Pull out the top protection lens base and seal the openings with textured tape to prevent dust from entering.
- Wear a finger cuff and take out the lens.
- Clean the lens, lens seat and sealing ring. If the spring sealing ring is damaged, replace it with a new one. Install the cleaned new lens (regardless of front and back sides) into the drawer base. Replace the sealing ring.
- Insert the top protection lens base back into the laser processing head, cover the top protection lens cover, and tighten the locking screws.

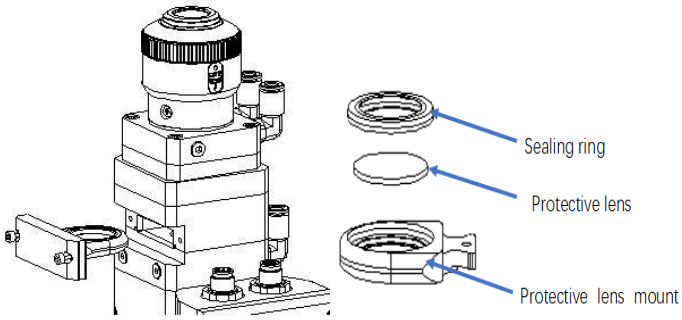

5.2.3 Removal and Installation of Collimating Lens

- The procedures for removing and installing collimating lens are as follows.
- Remove the laser head and move to a clean place. Clean all dust on the laser head surface;
- Use a 3mm inner hexagon spanner loosen the screws of collimating components (as shown below) and seal the part (connected to collimating components) with textured tape to prevent dust from falling inside the laser head.
- Unscrew the collimating lens mount and remove the spring pressure ring and the collimating lens with the lens removing tool.
- Clean or replace the collimating lens.
- As shown below, reassemble the collimating lens components in sequence. Note that the spring pressure ring is tightened properly and re-screwed into the collimating component.
- Tighten the locking screws of collimating component.
- Check the focus position is at the center of the nozzle or not before using, if not , the position should be reset.

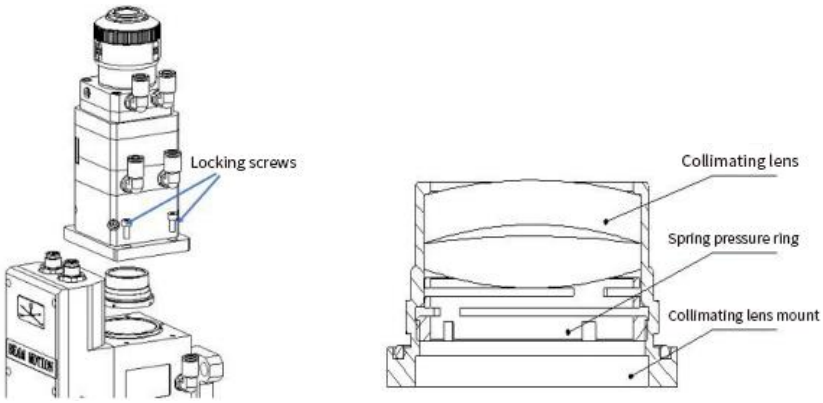

5.2.4 Removal and Installation of Focusing Lens

Removal and installation of focus lens refer to the steps as follows:

- Remove the laser head and move to a clean place. Clean all dust on the laser head surface.
- Place the laser head horizontally. As shown below, remove the locking screws from bottom

to top.

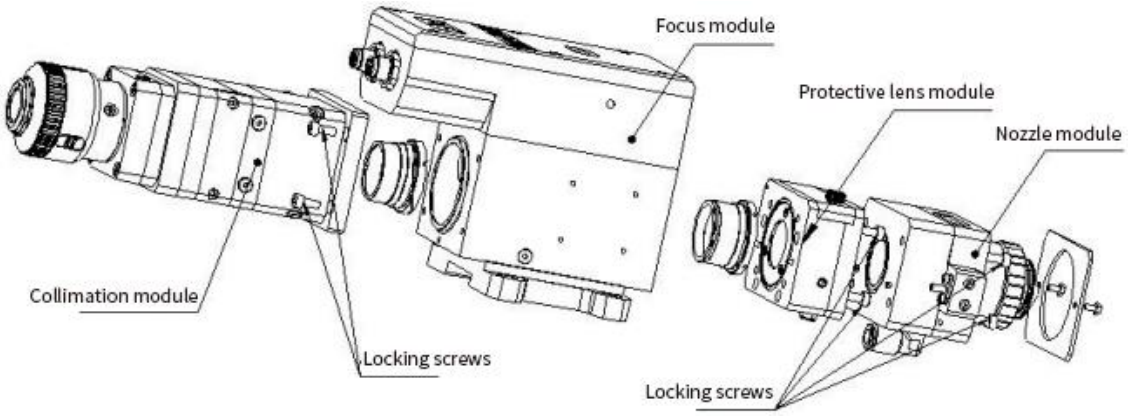

- As shown below, use a lens removing tool to remove the focus lens mount.

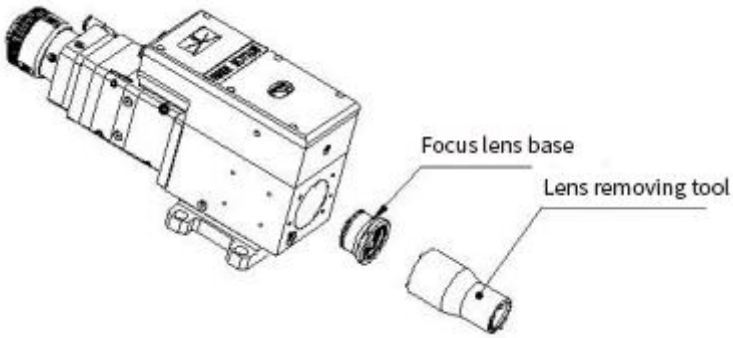

- Remove the spring pressure ring and focusing lens with a lens removing tool.
- Replace or clean the focusing lens.
- As the direction shown below, put the focusing lens and the spring pressure ring in the lens mount carefully and tighten the pressure ring properly.

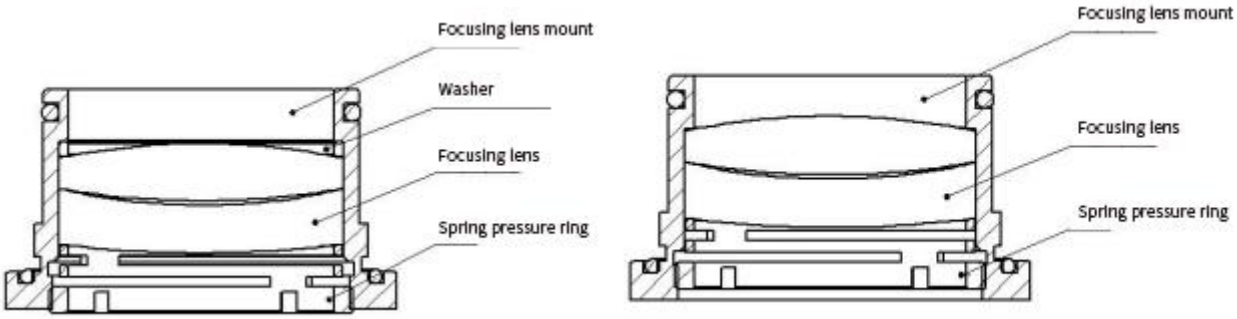

- Turn the focusing lens back into the focusing lens mount and tighten it.
- Reassemble and tighten the screws.
- Check the focus position is at the center of nozzle or not. If not, you need to align the beam.

5.3 Replace Nozzle Connection Assembly

During the laser cutting, the laser head will inevitably be hit. Users need to replace the nozzle connector if it gets damaged.

5.3.1 Replace Ceramic Structure

- Unscrew the nozzle.
- Hand pressing the ceramic structure so that it is not skewed and then unscrew the pressure sleeve.
- Align the pinhole of the new ceramic structure with the 2 locating pins and press the ceramic structure by hand, then screw the pressure sleeve.
- Screw the nozzle and tighten it properly.

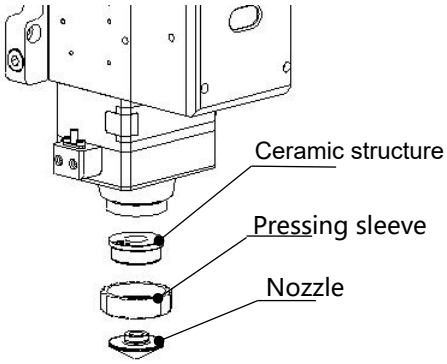

5.3.2 Replace Nozzle

- Screw the nozzle.
- Replace the new nozzle and re-tighten it properly.
- Once the nozzle or ceramic structure has to be replaced, capacitance calibration must be done again.

6 Mechanical and Optical Configuration

6.1 Physical Structure

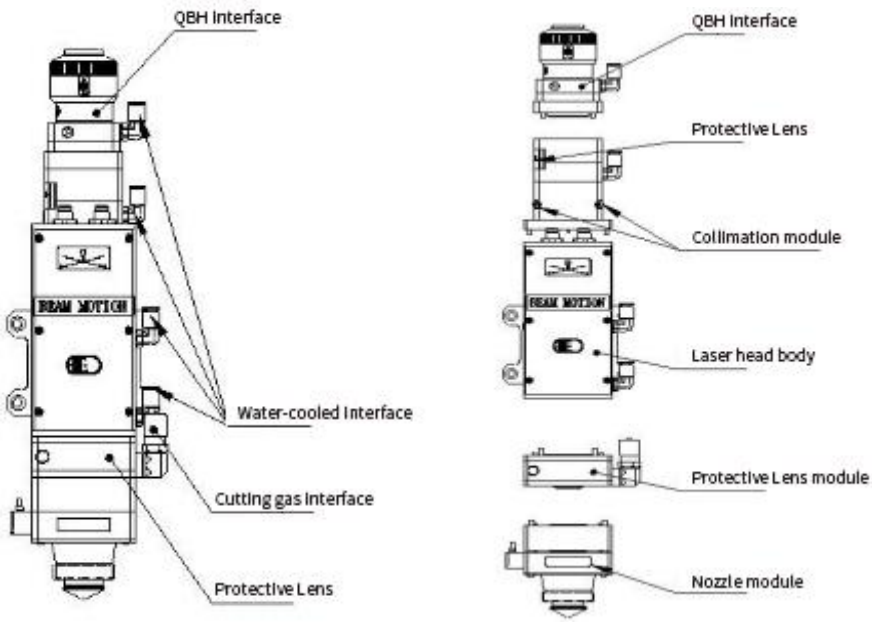

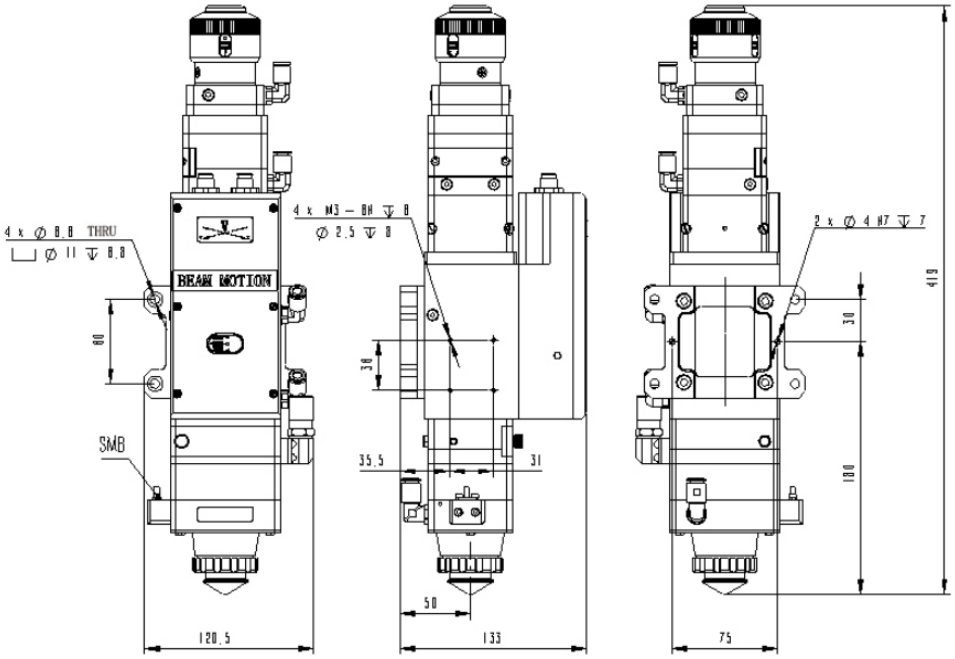

CL/mm		100			75	
FL/mm		125	155	200	125	155
H/mm	QBH	393	419	453	364	390

6.2 Optical Configuration

6.2.1 Collimation Length

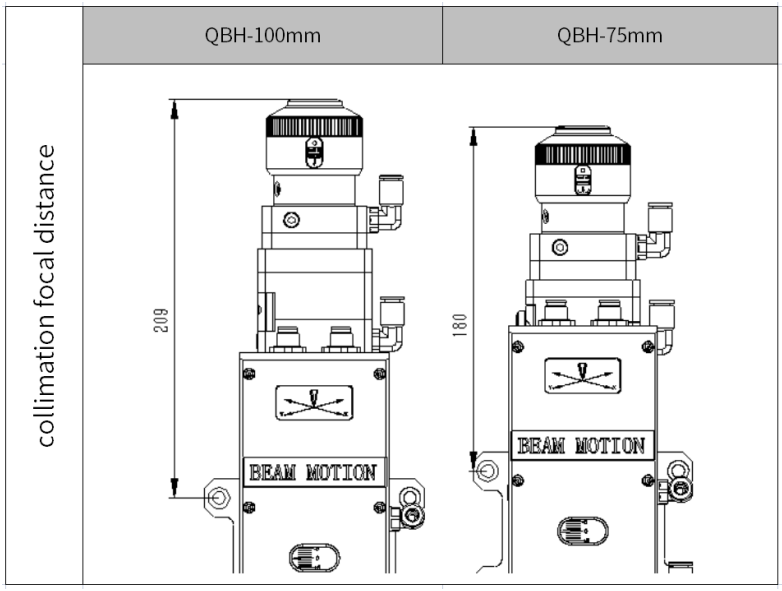

6.2.2 Focus Length
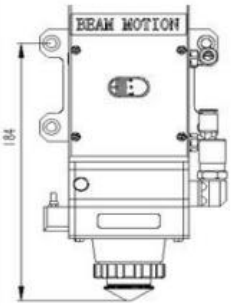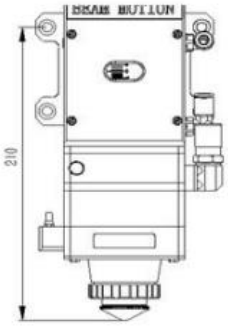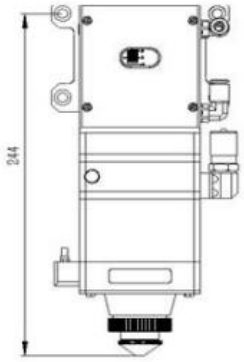
focusing focal distance	125mm.FL	155mm.FL	200mm.FL